SWISS

Installation *manual*

Technolite

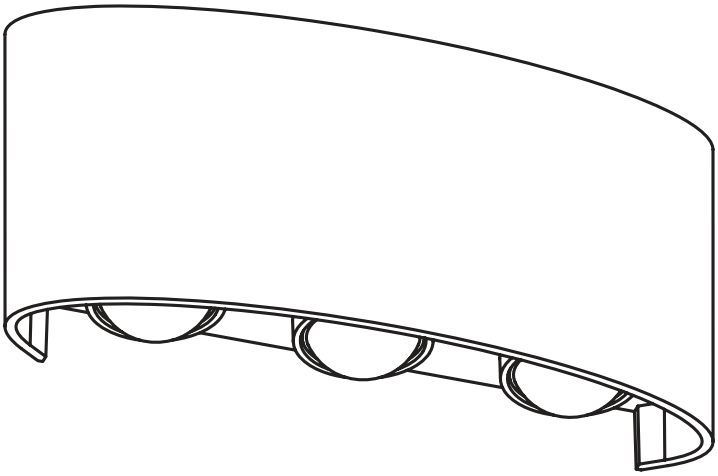

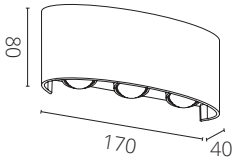

Inspired *by light*

Alterations in design, technical specifications and manuals are subject to change without notice.

SWISS

Installation *manual*

Technolite

01

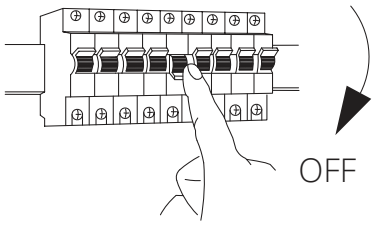

02

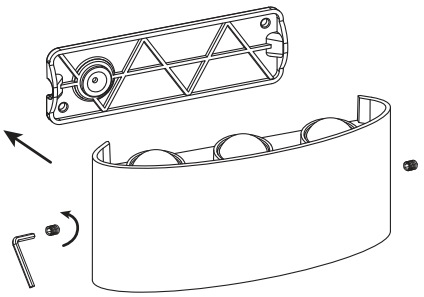

03

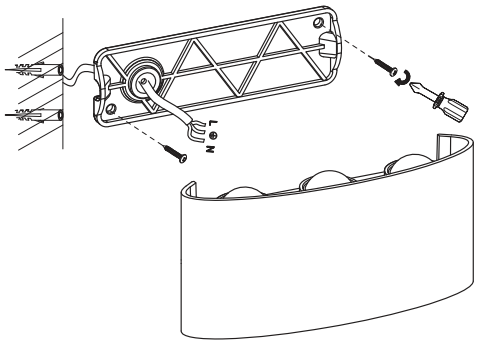

04

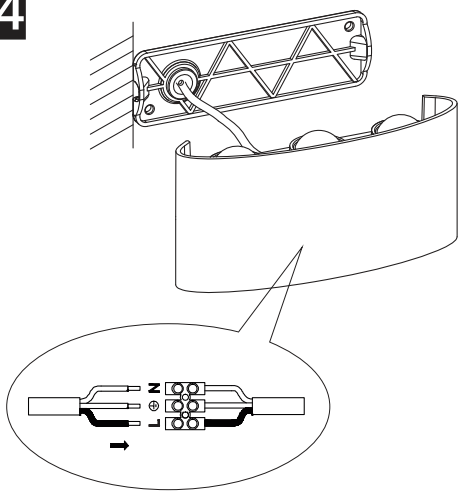

05

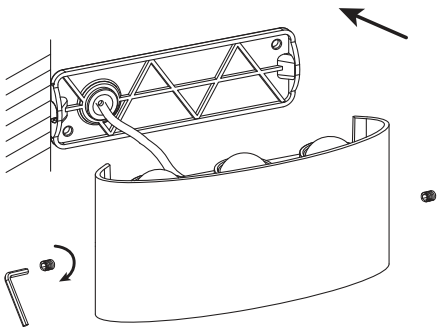

06

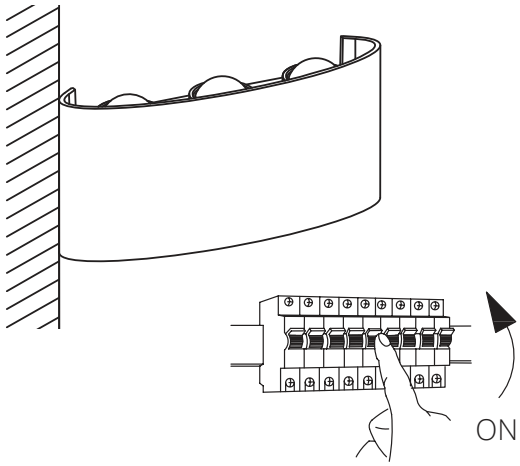

Inspired *by light*

Alterations in design, technical specifications and manuals are subject to change without notice.