Stone Out

***Installation** manual*

Technolite
www.tlite.co.il

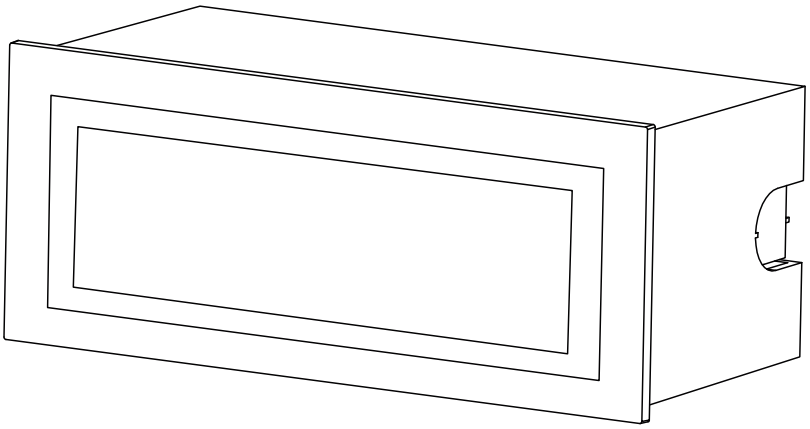

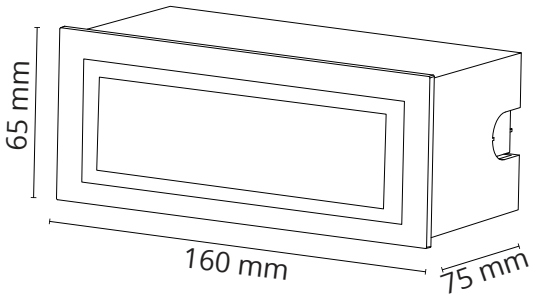

***Inspired** by light*

Alterations in design, technical specifications and manuals are subject to change without notice.

Stone Out

***Installation** manual*

Technolite
www.tlite.co.il

01

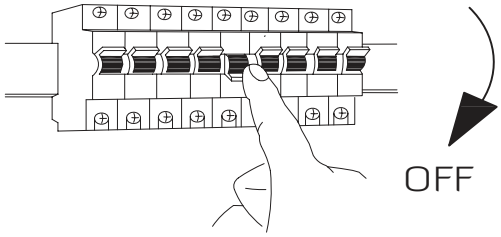

02

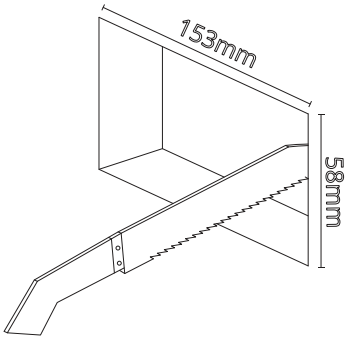

03

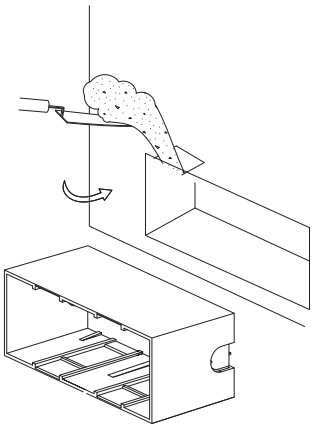

04

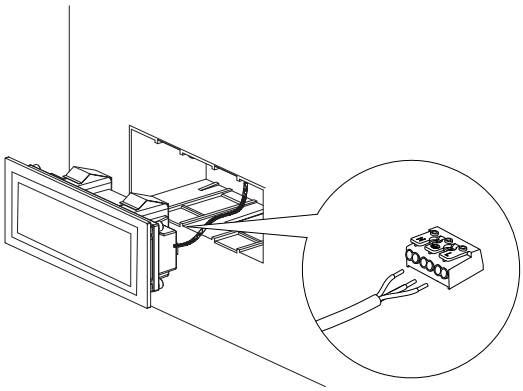

05

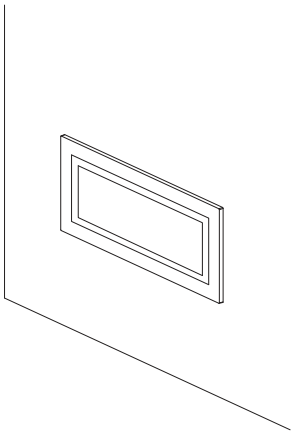

06

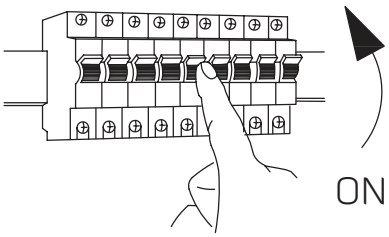

***Inspired** by light*

Alterations in design, technical specifications and manuals are subject to change without notice.